Classic Passive-Component Hybrid Audio Coupler or Phone Patch

Couples separate send/receive audio sources to/from phone line while isolating audio sources from each other.

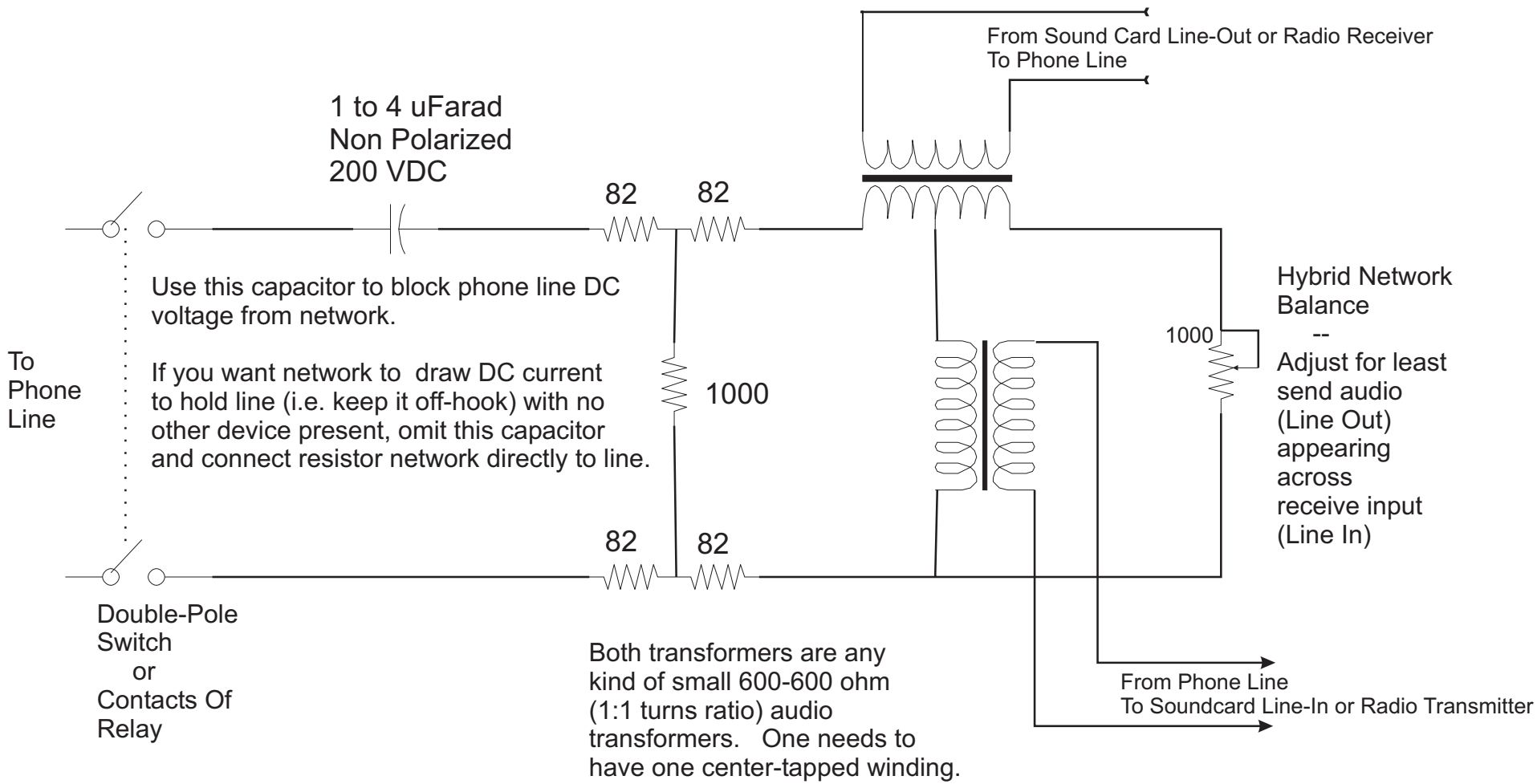

Stephen H. Smith wa8lmf @ aol.com 15 Apr 2003